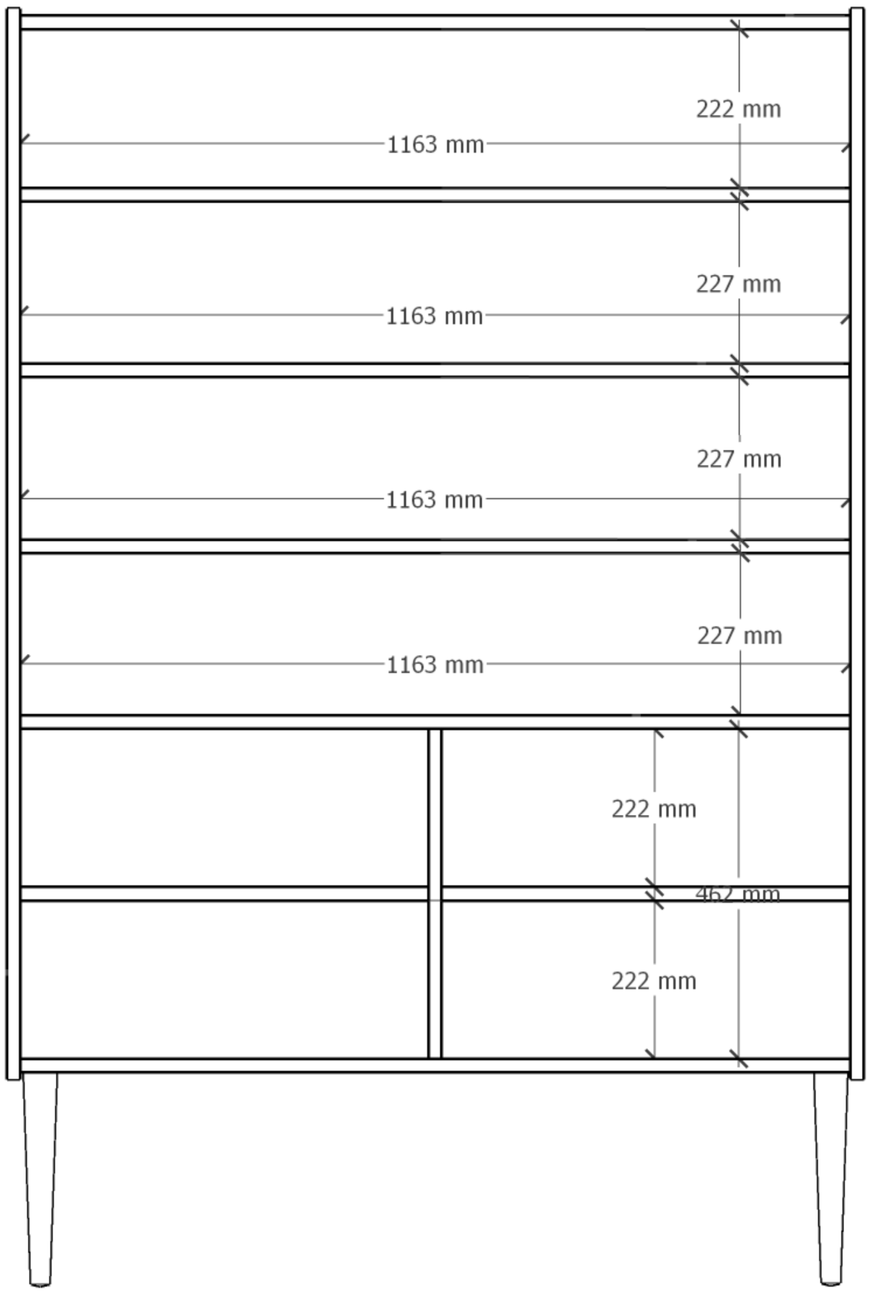


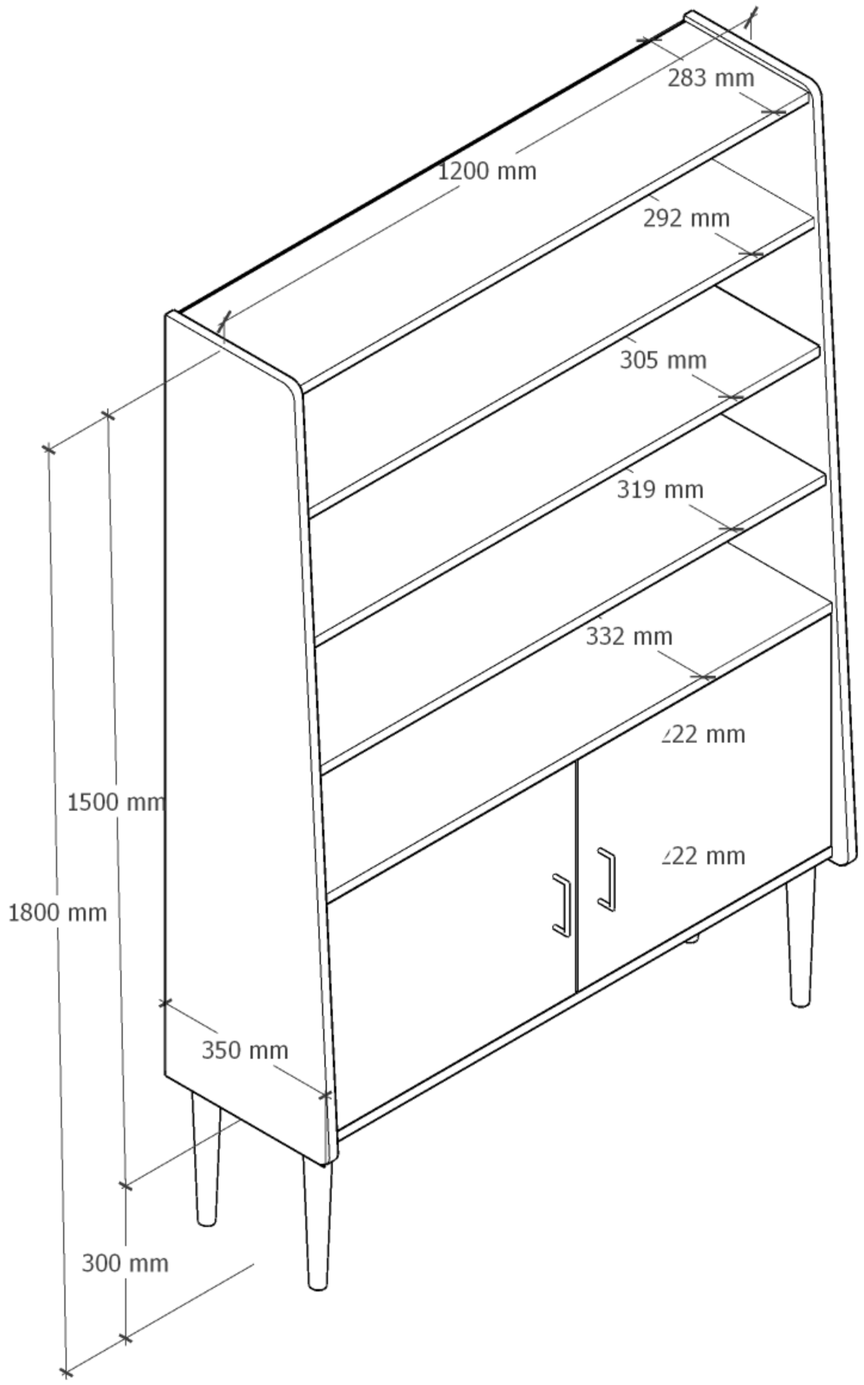


PASTFORM

FURNITURE